Village of Hales Corners, WI Building Board - Staff Report

Agenda:	Sept. 17, 2020	**Item:**	2.3
Petitioner:	Taff		
Location:	5555 S. 113th		
Request:	Accessory structure		

Overview:

Request to construct 16ft x 18 ft shed / accessory structure – 8 foot height.

Issues to Discuss:

Application as presented is zoning compliant. Shed is placed approximately 15 ft from the side yard lot line and 155 ft from the rear yard lot line.

Principal structure has an attached garage and under zoning code is allowed one (1) detached structure.

BUILDING PERMIT APPLICATION

Village of Hales Corners
5635 S. New Berlin Rd., Hales Corners, WI 53130
(414) 529-6161/Fax: (414) 529-6179
www.halescorners.org
Inspection scheduling: Ken Robers (414)423-2100 ext 3107 or email: krobers@greendale.org

Permit Number
20 HALE - B00086
Zoning: R3 Bld. Bd.: Y N
(BB fee separate from permit fee below)

PLEASE PRINT ALL INFORMATION Tax Key# 658-9977-000

Property Owner	Project Address
Clint Taff	5555 S. 113th Street Hales Corner, WI 53130
Contact Email: territaff@wi.rr.com	Owner's Phone: 414-406-0642

CONTRACTOR	Dwelling Contr. #	Qualifier #
N/A (I was a home builder for 16 years and I plan on doing this project myself)		
Address	Email	
City/State/Zip	Contact Name	Phone

Explanation and areas of work: New 16x'18'x8' Detached Accessory Bldg. on North side of property.

288ft²

BUILDING IS:
- ☐ Residential
- ☐ Commercial
- ☐ Manufacturing
- ☒ Det. accessory bldg
- ☐ Shed 100sq.ft or less

PERMIT TYPE:
- ☐ Building-New
- ☐ Building-Addn.
- ☐ Alteration
- ☐ Deck / Pool
- ☐ Special Use
- ☐ Re-Roof
- ☐ Siding
- ☐ Fence
- ☐ Moving
- ☐ Re-Inspection
- ☐ Fireplace
- ☐ Grading/Filling
- ☐ Demolition
- ☐ Other

NET COST $ 5000.00
(LESS HVAC, ELEC, PLBG)

General Contractor _____ Architect/Designer _____
Electrical Contractor _____ Plumbing Contractor _____
HVAC Contractor _____ Sewer/Water Contractor _____

☑ **SUBMISSION REQUIREMENTS:**

Electronic format of architectural plans is required for Building Board. Email: cmartin@halescorners.org

- ✓ 3 Copies of scaled drawings that may include: footprint, elevations, cross section * (3 sets for commercial plans)
- ✓ Site survey/plat with proposed structure drawn according to set backs/grading plan (if applicable)
- ✓ Any calculations needed and or types of materials (i.e. beams, trusses)
- ✓ If the owner is applying for the permit for a contractor, they **must** sign a ***Cautionary Statement document***

768 28155 1 08/17/2020
BB 5555 S 113TH ST -BUILDING
11:18:27 PAID 50.00

NOTE: PLANS AND SPECIFICATIONS OF THE ABOVE DESCRIBED WORK MUST ACCOMPANY THIS APPLICATION. Starting work without procuring a permit for work will result in the assessment of double fees.

It is hereby agreed between the undersigned and the Village of Hales Corners that all work performed as herein described shall be completed in strict compliance with the Village of Hales Corners Municipal Code and all laws of the State of Wisconsin relating to such work. Furthermore, by signing this application, or by authorizing an agent to sign this application, the owner/tenant acknowledges that an inspection or inspections of the work herein described are required and consents to the entry onto the subject property by an employee or agent of the Village of Hales Corners to perform all necessary inspections. Said inspection(s) shall only be made at reasonable times by notice and/ or appointment. *** Permit expires 18 months from issue date.**

Clint Taff 8/14/2020
Owner or Contractor Signature **Date** **Building Inspector or Municipal Agent** **Date**

Conditions of Approval Notes:

APPROVED BY PLAN COMMISSION or BUILDING BOARD Date: _____
COMM/BOARD FEES PAID: _____
NOTES:

BUILDING PERMIT FEES

New, Additions, Alterations	80.64
Occupancy Permit	
Erosion Control	
Plan Examination	60.00
Other, seal, etc.	
Total Building FEES DUE ..... $	140.64

(OVER)

Village of Hales Corners Building Board Addendum

5635 S. New Berlin Rd., Hales Corners, WI 53130
Phone: 414-529-6161 Fax: 414-529-6179
www.halescorners.org
Submit electronic plans to: cmartin@halescorners.org

If your project requires Building Board review please read the following: *Principles and standards for architectural review shall be utilized by the Building Board in its review, approval or denial of an application. These standards are also intended to be a design review for builders and owners to use in the architectural plans. The Building Board shall review and make modifications to the standards to keep them current. These are some examples of items reviewed: building scale and mass, building roof lines and roof shapes, materials, colors and publicly exposed elevations.*

Applicant: Clint Taff Application Date: 8/14/2020

Address: 5555 S. 113th Street Hales Corner, WI 53130 Building Board Date: September 17, 2020

☑

CHECK LIST Items needed for review
Incomplete applications will not be accepted.

The following items must be received at the Village Hall by 5:00 p.m. at least 15 business days prior to the desired Building Board meeting date.

☒ This form along with the building permit application.

☒ Building Board fee of $ 50.00 . (check – payable to: Village of Hales Corners or cash only)

☒ 3 copies of the drawings with scaled elevations noting all exterior colors and materials.

Plans may be reduced to std., ledger, legal pages, or an electronic version such as a disk or memory stick. Plans larger than 8 ½" x 11" require electronic submission.

☒ A color sample or color photo of color choices or product handout, etc.

☒ A photo of the existing area.

☒ Parcel survey (information listed below to be shown on the survey or site plan.)

* The Location and dimensions of proposed and existing structures.
* Distances to all lot lines.

OFFICE USE: One set of plans accompany Addendum.

Boards comments and approval stamp:

CAUTIONARY STATEMENT TO OWNERS OBTAINING BUILDING PERMITS

101.65(1r) of the Wisconsin Statutes requires municipalities that enforce the Uniform Dwelling Code to provide an owner who applies for a building permit with a statement advising the owner that:

If the owner hires a contractor to perform work under the building permit and the contractor is not bonded or insured as required under s.101.654(2)(a), the following consequences might occur:

(a) The owner may be held liable for any bodily injury to or death of others or for any damage to the property of others that arises out of the work performed under the building permit or that is caused by any negligence of the contractor that occurs in connection with the work performed under the building permit.

(b) The owner may not be able to collect from the contractor damages for any loss sustained by the owner because of a violation by the contractor of the one- and 2-family dwelling code or an ordinance enacted under sub. (1)(a), because of any bodily injury to or death of others or damage to the property of others that arises out of the work performed under the building permit or because of any bodily injury to or death of others or damage to the property of others that is caused by any negligence by the contractor that occurs in connection with the work performed under the building permit.

By signing below, I acknowledge that I have received a copy of this cautionary statement.

Clint Taff

Clint Taff

Homeowner's Signature

Date: 8/14/2020

MILWAUKEE COUNTY INTERACTIVE MAPPING SERVICE

94 0 47 94 Feet

NAD_1983_2011_StatePlane_Wisconsin_South_FIPS_4803_Ft_US
© MCAMLIS

1: 564

DISCLAIMER: This map is a user generated static output from the Milwaukee County Land Information Office Interactive Mapping Service website.The contents herein are for reference purposes only and may or may not be accurate, current or otherwise reliable. No liability is assumed for the data delineated herein either expressed or implied by Milwaukee County or its employees.

THIS MAP IS NOT TO BE USED FOR NAVIGATION

Notes

Home / Doors, Windows & Millwork Exterior Doors Garage Doors & Openers / **Garage Doors**

Ideal Door® Designer 9' x 7' Oak Walnut Insulated Garage Door with Windo

Model Number: MR1LU_9X7_WALNUT_ARCH2INSERT | Menards® SKU: 4252944

Watch Video

Cedar Creek™ Vinyl Siding

MENARDS

FRANKLIN, 10925 W SPEEDWAY DR, FRANKLIN, WI, 414-425-7309

Yard Building Floor Plan

**Illustration may not depict all selections.

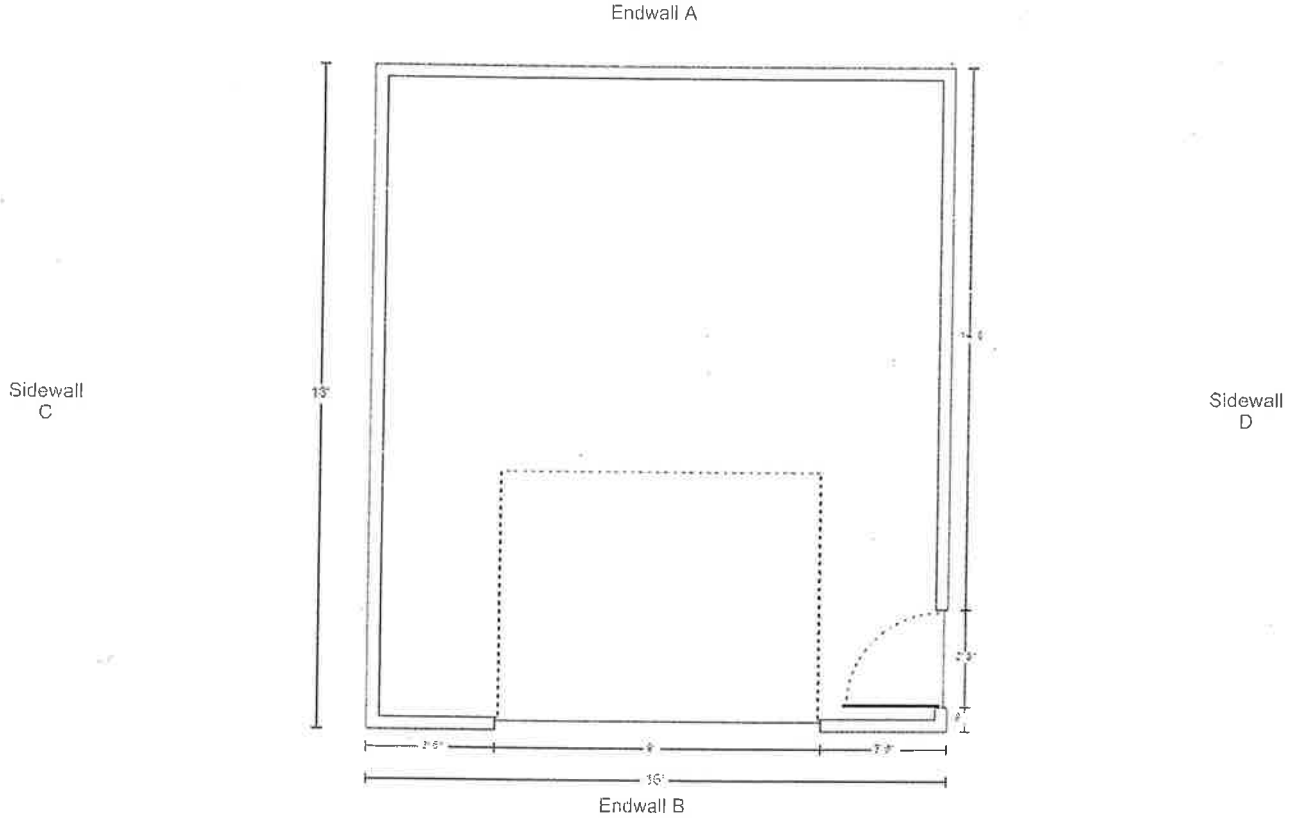

Design Name: Yard Building Design2
Design ID: 319555125400
Date: 08/08/2020
Estimate ID: 9284

Estimated Total Price: $

*Today's estimated price, future pricing may go up or down. Tax, labor, and delivery not included. Price does not reflect mail-in rebates.

Floor type (concrete, dirt, gravel) is NOT included in estimated price. The floor type is used in the calculation of materials needed. Labor, foundation, steel beams, paint, electrical, heating, plumbing, and delivery are also NOT included in estimated price. This is an estimate. It is only for general price information. This is not an offer and there can be no legally binding contract between the parties based on this estimate. The prices stated herein are subject to change depending upon the market conditions. The prices stated on this estimate are not firm for any time period unless specifically written otherwise on this form. The availability of materials is subject to inventory conditions.

MENARDS IS NOT RESPONSIBLE FOR ANY LOSS INCURRED BY THE GUEST WHO RELIES ON PRICES SET FORTH HEREIN OR ON THE AVAILABILITY OF ANY MATERIALS STATED HEREIN. All information on this form, other than price, has been provided by the guest and Menards is not responsible for any errors in the information on this estimate, including but not limited to quantity, dimension and quality. Please examine this estimate carefully.

MENARDS MAKES NO REPRESENTATIONS, ORAL, WRITTEN OR OTHERWISE THAT THE MATERIALS LISTED ARE SUITABLE FOR ANY PURPOSE BEING CONSIDERED BY THE GUEST. BECAUSE OF WIDE VARIATIONS IN CODES, THERE ARE NO REPRESENTATIONS THAT THE MATERIALS LISTED HEREIN MEET YOUR CODE REQUIREMENTS. THE PLANS AND/OR DESIGNS PROVIDED ARE NOT ENGINEERED. LOCAL CODE OR ZONING REGULATIONS MAY REQUIRE SUCH STRUCTURES TO BE PROFESSIONALLY ENGINEERED AND CERTIFIED PRIOR TO CONSTRUCTION.

Design-It Center
RESIDENTIAL POST FRAME

MENARDS

FRANKLIN, 10925 W SPEEDWAY DR, FRANKLIN, WI, 414-425-7309

Wall Configurations

*Illustration may not depict all options selected.

Design Name: Yard Building Design2

Design ID: 319555125400

Estimate ID: 9284

ENDWALL B

(1) - Ideal Door® Designer 9' x 7' Oak Walnut Insulated G...

SIDEWALL D

(1) - Commander® Primed Steel Flush Prehung Entry Door

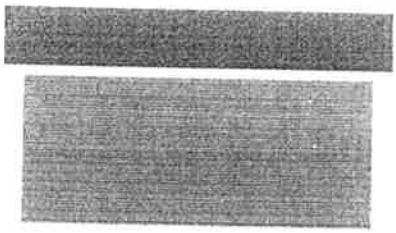

SIDEWALL C

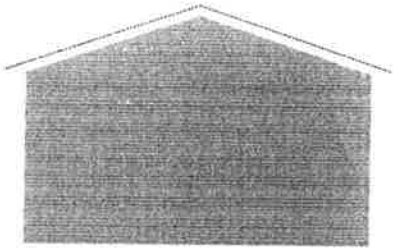

ENDWALL A

Job	Truss	Truss Type	Qty	Ply	
QTREC0623247	T1	COMMON	7	1	Job Reference (optional)

Midwest Manufacturing, Eau Claire, WI

Run: 8.32 S Nov 19 2019 Print: 8.320 S Nov 19 2019 MiTek Industries, Inc. Fri Mar 13 07:55:03 Page: 1

ID:n86Zn_ccTrKSUA5zh3OS5vzbPim-8SYbgni3HVggH?zGyz?ZkuNrqLVJL??Q6eVglozbPhM

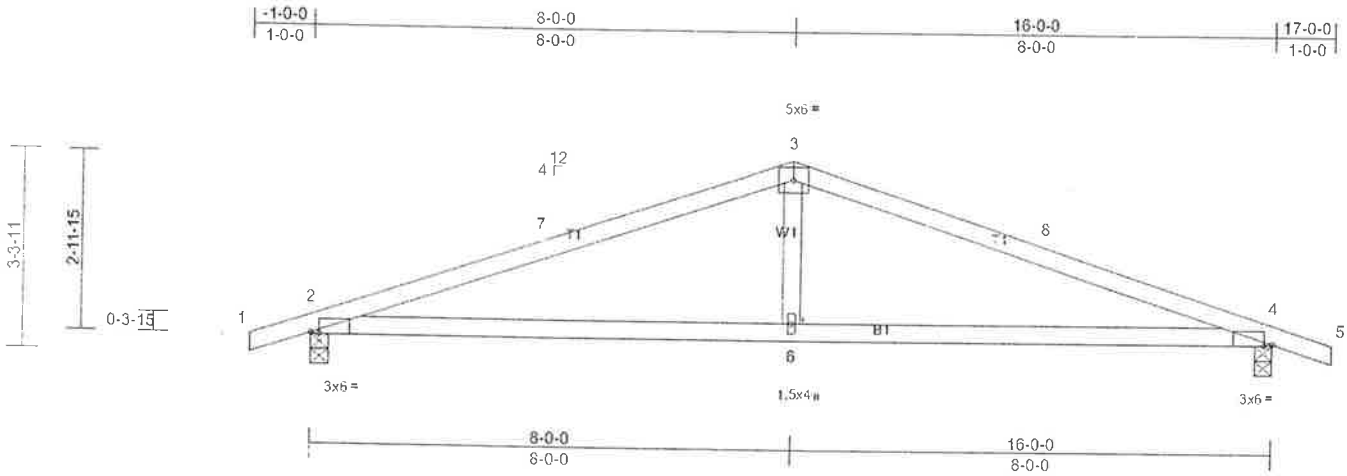

Scale = 1:33.8

Plate Offsets (X, Y): [2:0-1-10,Edge], [4:0-1-10,Edge]

Loading	(psf)	Spacing	2-0-0	CSI		DEFL	in	(loc)	l/defl	L/d	PLATES	GRIP
TCLL (roof)	30.0	Plate Grip DOL	1.15	TC	0.95	Vert(LL)	-0.12	2-6	>999	240	MT20	197/144
Snow (Ps/Pg)	27.7/40.0	Lumber DOL	1.15	BC	0.67	Vert(TL)	-0.30	2-6	>635	180		
TCDL	7.0	Rep Stress Incr	YES	WB	0.06	Horiz(TL)	0.04	4	n/a	n/a		
BCLL	0.0 *	Code	IRC2009/TPI2007	Matrix-S								
BCDL	10.0										Weight: 43 lb	FT = 15%

LUMBER

TOP CHORD 2x4 SPF 1650F 1.5E
BOT CHORD 2x4 SPF No.2
WEBS 2x4 SPF No.2

BRACING

TOP CHORD Structural wood sheathing directly applied.
BOT CHORD Rigid ceiling directly applied or 10-0-0 oc bracing.

MiTek recommends that Stabilizers and required cross bracing be installed during truss erection, in accordance with Stabilizer Installation guide.

REACTIONS (lb/size) 2=823/0-3-8, (min. 0-1-8), 4=823/0-3-8, (min. 0-1-8)
Max Horiz 2=35 (LC 7)
Max Uplift 2=-103 (LC 9), 4=-103 (LC 10)

FORCES (lb) - Max. Comp./Max. Ten. - All forces 250 (lb) or less except when shown.
TOP CHORD 2-7=-1389/161, 3-7=-1298/192, 3-8=-1298/192, 4-8=-1389/161
BOT CHORD 2-6=-106/1228, 4-6=-106/1228
WEBS 3-6=0/375

JOINT STRESS INDEX

2 = 0.75, 3 = 0.69, 4 = 0.75 and 6 = 0.40

NOTES

1) Unbalanced roof live loads have been considered for this design.
2) Wind: ASCE 7-05; 90mph; TCDL=4.2psf; BCDL=6.0psf; h=25ft; Cat. II; Exp B; Enclosed; MWFRS (low-rise) exterior zone and C-C Exterior (2) zone; cantilever left and right exposed ; end vertical left and right exposed;C-C for members and forces & MWFRS for reactions shown; Lumber DOL=1.60 plate grip DOL=1.60
3) TCLL: ASCE 7-05; Pr=30.0 psf (roof live load: Lumber DOL=1.15 Plate DOL=1.15); Pg=40.0 psf (ground snow); Ps=27.7 psf (roof snow: Lumber DOL=1.15 Plate DOL=1.15); Category II; Exp B; Fully Exp.; Ct=1.10
4) Roof design snow load has been reduced to account for slope.
5) Unbalanced snow loads have been considered for this design.
6) This truss has been designed for greater of min roof live load of 12.0 psf or 1.00 times flat roof load of 27.7 psf on overhangs non-concurrent with other live loads.
7) This truss has been designed for a 10.0 psf bottom chord live load nonconcurrent with any other live loads.
8) * This truss has been designed for a live load of 20.0psf on the bottom chord in all areas where a rectangle 3-06-00 tall by 2-00-00 wide will fit between the bottom chord and any other members.
9) Provide mechanical connection (by others) of truss to bearing plate capable of withstanding 103 lb uplift at joint 2 and 103 lb uplift at joint 4.
10) This truss is designed in accordance with the 2009 International Residential Code sections R502.11.1 and R802.10.2 and referenced standard ANSI/TPI 1.

LOAD CASE(S) Standard

Job	Truss	Truss Type	Qty	Ply	
QTREC0622317	T2E	Common Supported Gable	1	1	Job Reference (optional)

Midwest Manufacturing, Eau Claire, WI

Run: 8.32 S Nov 19 2019 Print: 8.320 S Nov 19 2019 MiTek Industries, Inc. Wed May 06 07:25:35 Page: 1
ID:vDG8o2TYLp_bwg83ZDkS93zeG_5-Phz7THRTz_vz47?EBWTFTncshj__jFi0H?2QJ9zJHz_

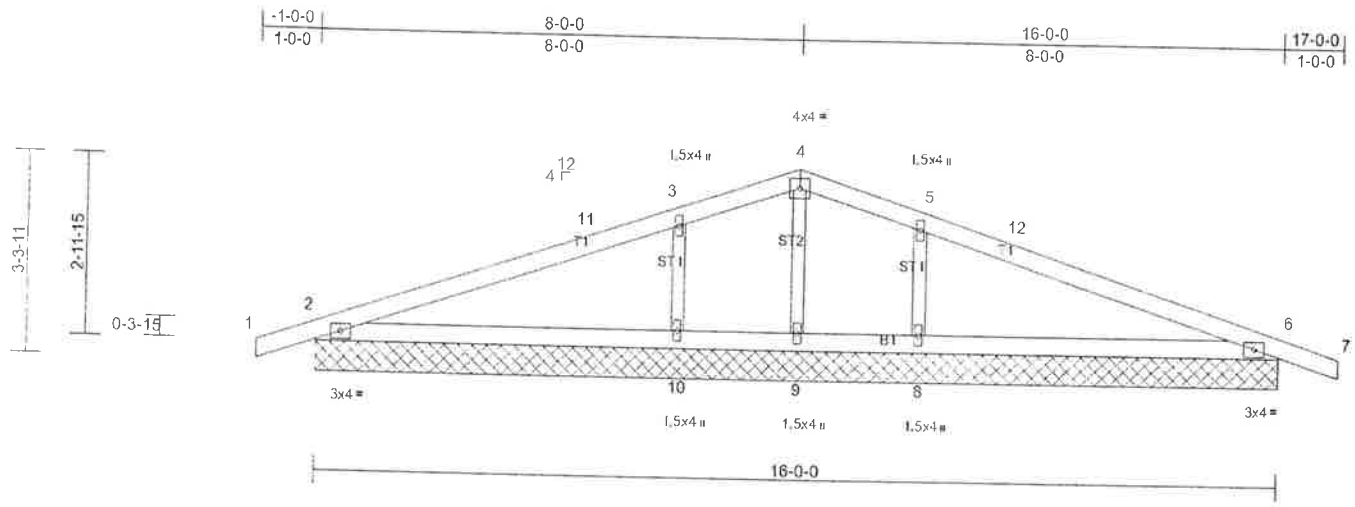

Scale = 1:33.8

Loading	(psf)	Spacing	2-0-0	CSI		DEFL	in	(loc)	l/defl	L/d	PLATES	GRIP
TCLL (roof)	20.0	Plate Grip DOL	1.15	TC	0.35	Vert(LL)	n/a	-	n/a	999	MT20	197/144
Snow (Ps/Pg)	20.8/30.0	Lumber DOL	1.15	BC	0.24	Vert(TL)	n/a	-	n/a	999		
TCDL	7.0	Rep Stress Incr	YES	WB	0.12	Horiz(TL)	0.00	6	n/a	n/a		
BCLL	0.0 *	Code	IRC2009/TPI2007	Matrix-S								
BCDL	10.0										Weight: 45 lb	FT = 15%

LUMBER
TOP CHORD 2x4 SPF No.2
BOT CHORD 2x4 SPF No.2
OTHERS 2x3 SPF Stud

BRACING
TOP CHORD Structural wood sheathing directly applied or 6-0-0 oc purlins.
BOT CHORD Rigid ceiling directly applied or 6-0-0 oc bracing.

MiTek recommends that Stabilizers and required cross bracing be installed during truss erection, in accordance with Stabilizer Installation guide.

REACTIONS All bearings 16-0-0.
(lb) - Max Horiz 2=35 (LC 7)
Max Uplift All uplift 100 (lb) or less at joint(s) 2, 6, 8, 10 except 9=-166 (LC 2)
Max Grav All reactions 250 (lb) or less at joint(s) 2, 6, 9 except 8=539 (LC 4), 10=539 (LC 3)

FORCES (lb) - Max. Comp./Max. Ten. - All forces 250 (lb) or less except when shown.
WEBS 3-10=-379/171, 5-8=-379/171

JOINT STRESS INDEX
2 = 0.33, 3 = 0.23, 4 = 0.18, 5 = 0.23, 6 = 0.33, 8 = 0.22, 9 = 0.10 and 10 = 0.22

NOTES
1) Unbalanced roof live loads have been considered for this design.
2) Wind: ASCE 7-05; 90mph; TCDL=4.2psf; BCDL=6.0psf; h=25ft; Cat. II; Exp B; Enclosed; MWFRS (low-rise) exterior zone and C-C Exterior (2) zone; cantilever left and right exposed ; end vertical left and right exposed;C-C for members and forces & MWFRS for reactions shown; Lumber DOL=1.60 plate grip DOL=1.60
3) Truss designed for wind loads in the plane of the truss only. For studs exposed to wind (normal to the face), see Standard Industry Gable End Details as applicable, or consult qualified building designer as per ANSI/TPI 1.
4) TCLL: ASCE 7-05; Pr=20.0 psf (roof live load: Lumber DOL=1.15 Plate DOL=1.15); Pg=30.0 psf (ground snow); Ps=20.8 psf (roof snow: Lumber DOL=1.15 Plate DOL=1.15); Category II; Exp B; Fully Exp.; Ct=1.10
5) Roof design snow load has been reduced to account for slope.
6) Unbalanced snow loads have been considered for this design.
7) This truss has been designed for greater of min roof live load of 12.0 psf or 1.00 times flat roof load of 20.8 psf on overhangs non-concurrent with other live loads.
8) Gable requires continuous bottom chord bearing.
9) Gable studs spaced at 2-0-0 oc.
10) This truss has been designed for a 10.0 psf bottom chord live load nonconcurrent with any other live loads.
11) * This truss has been designed for a live load of 20.0psf on the bottom chord in all areas where a rectangle 3-06-00 tall by 2-00-00 wide will fit between the bottom chord and any other members.
12) Provide mechanical connection (by others) of truss to bearing plate capable of withstanding 100 lb uplift at joint(s) 2, 6, 10, 8 except (jt=lb) 9=165.
13) This truss is designed in accordance with the 2009 International Residential Code sections R502.11.1 and R802.10.2 and referenced standard ANSI/TPI 1.

LOAD CASE(S) Standard